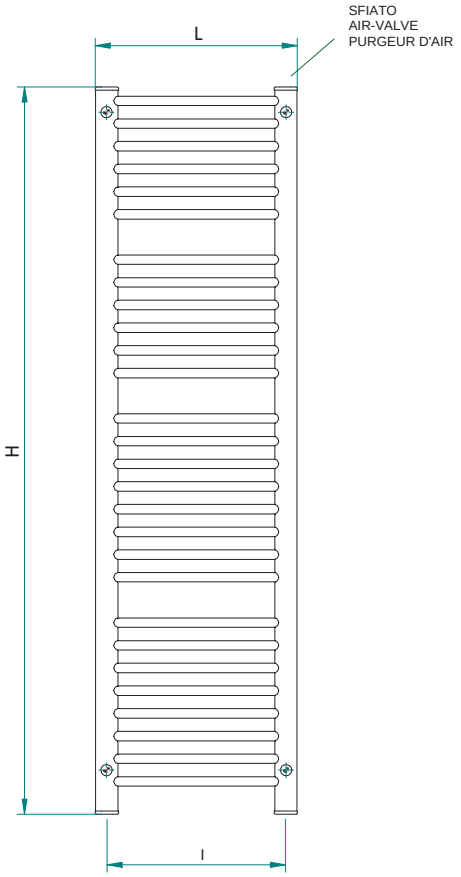

L LARGHEZZA
width / largeur

H ALTEZZA
height / hauteur

I INTERASSE TUBI PER LA VERSIONE IDRAULICA
pipes' connections for the hydraulic version
connexions des tuyaux pour la version hydraulique

INGOMBRO CON ATTACCO LUNGO
MEASURES WITH LONG BRACKETS
MEASURATIONS AVEC ATTACHE LONG

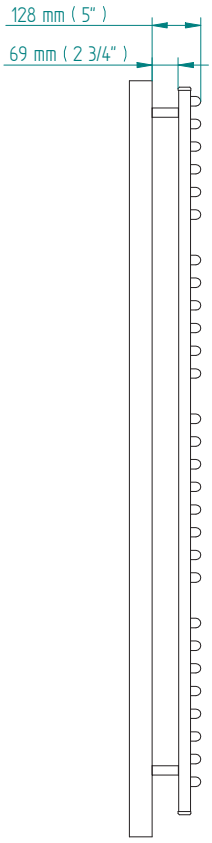

INGOMBRO CON ATTACCO STANDARD
MEASURES WITH STANDARD BRACKETS
MEASURATIONS AVEC ATTACHE STANDARD

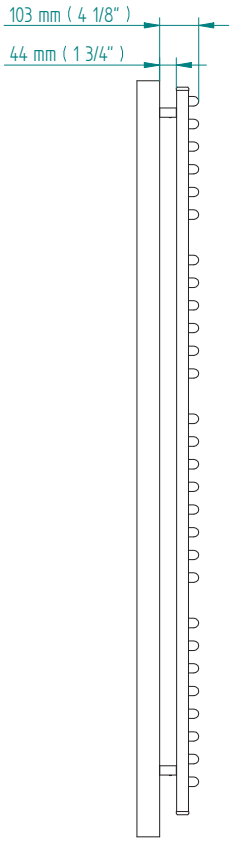

VERSIONE ELETTRICA / Electric version / Version électrique

Ingombro regolatore di potenza / Digital heat controller dimensions / Dimensions du regulateur de puissance

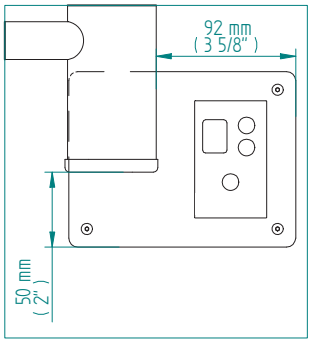

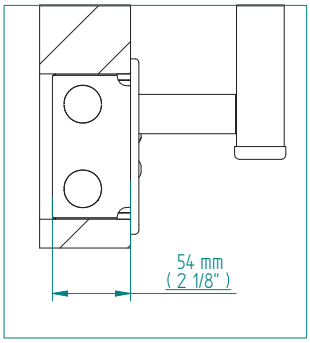

Ingombro placchetta a muro / Wall-plate dimension / Dimension de la plaquette

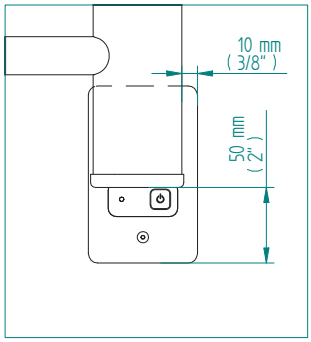

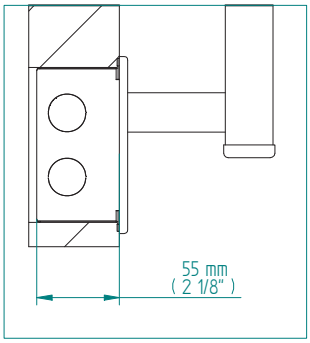

VERSIONE IDRAULICA / Hydraulic version / Version hydraulique

Ingombro valvola Cylinder / Cylinder valve dimension / Dimension de la valve Cylinder

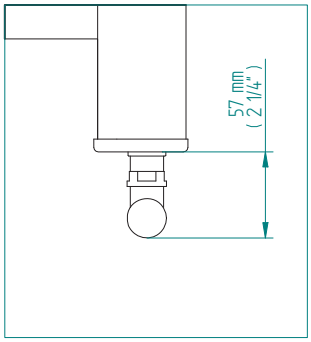

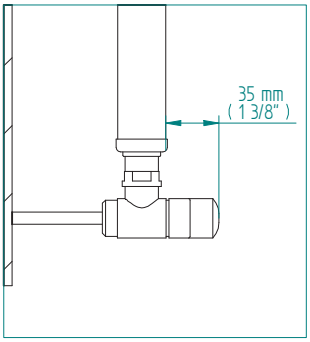

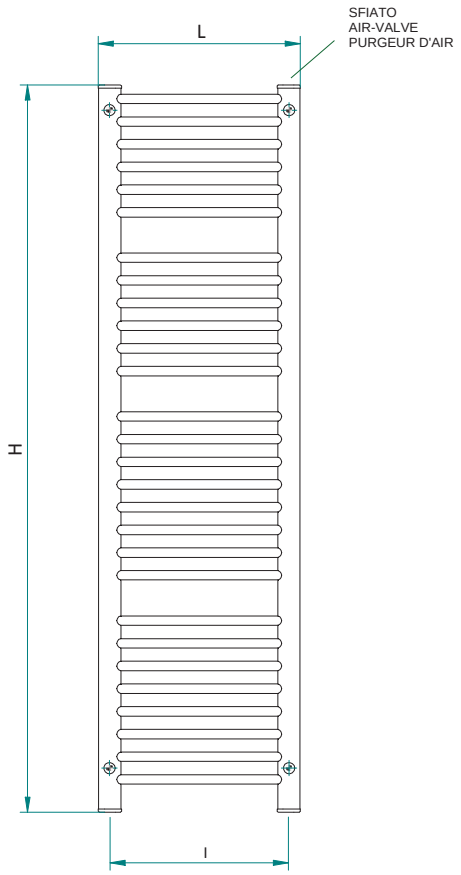

L LARGHEZZA
width / largeur

H ALTEZZA
height / hauteur

I INTERASSE TUBI PER LA VERSIONE IDRAULICA
pipes' connections for the hydraulic version
connexions des tuyaux pour la version hydraulique

INGOMBRO CON ATTACCO LUNGO
MEASURES WITH LONG BRACKETS
MEASURATIONS AVEC ATTACHE LONG

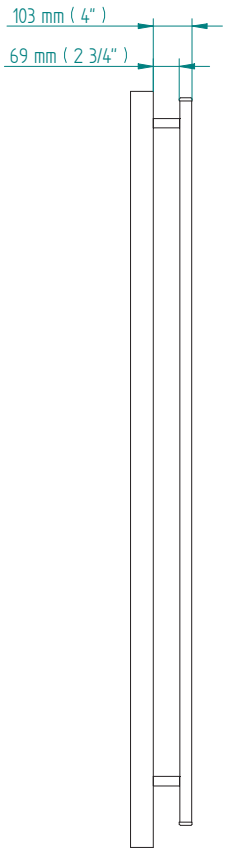

INGOMBRO CON ATTACCO STANDARD
MEASURES WITH STANDARD BRACKETS
MEASURATIONS AVEC ATTACHE STANDARD

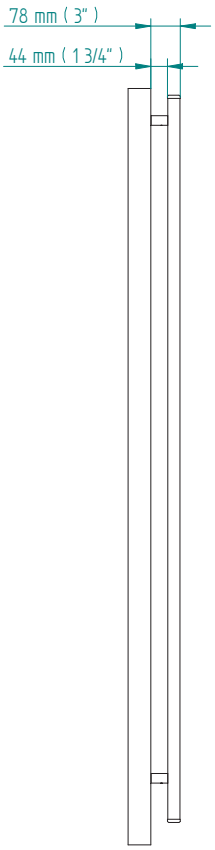

VERSIONE ELETTRICA / Electric version / Version électrique

Ingombro regolatore di potenza / Digital heat controller dimensions / Dimensions du regulateur de puissance

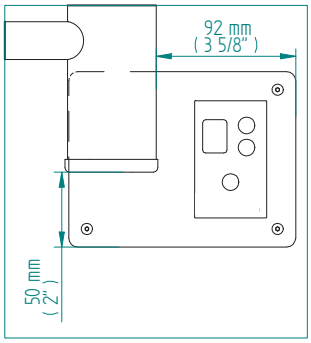

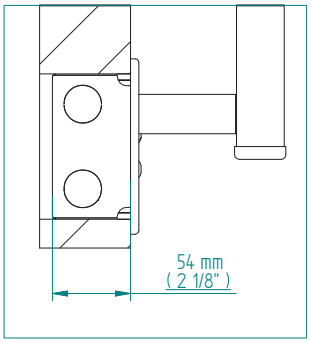

Ingombro placchetta a muro / Wall-plate dimension / Dimension de la plaquette

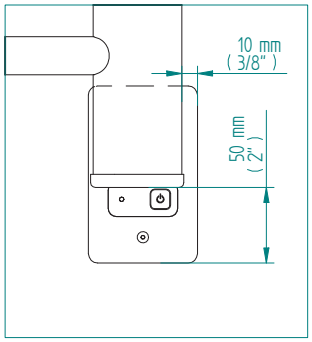

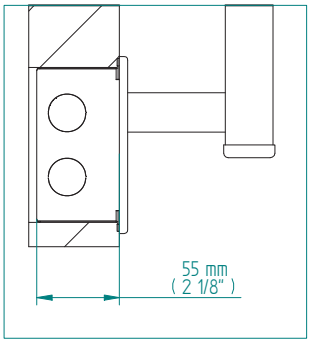

VERSIONE IDRAULICA / Hydraulic version / Version hydraulique
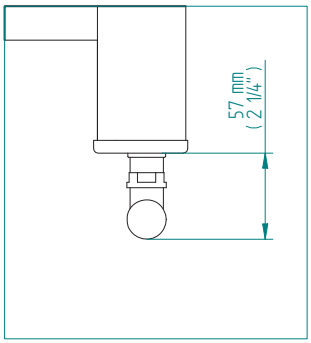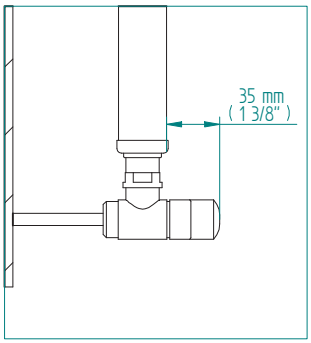
Ingombro valvola Cylinder / Cylinder valve dimension / Dimension de la valve Cylinder